FIRST ANGLE PROJECTION

(ALL DIMENSIONS ARE IN mm)

DRG.NO. 34023240125

THE INFORMATION ON THIS DOCUMENT IS THE PROPERTY OF BHARAT HEAVY ELECTRICALS LIMITED.
IT MUST NOT BE USED DIRECTLY OR INDIRECTLY IN ANY WAYDETRIMENTAL TO THE INTEREST OF THE COMPANY.

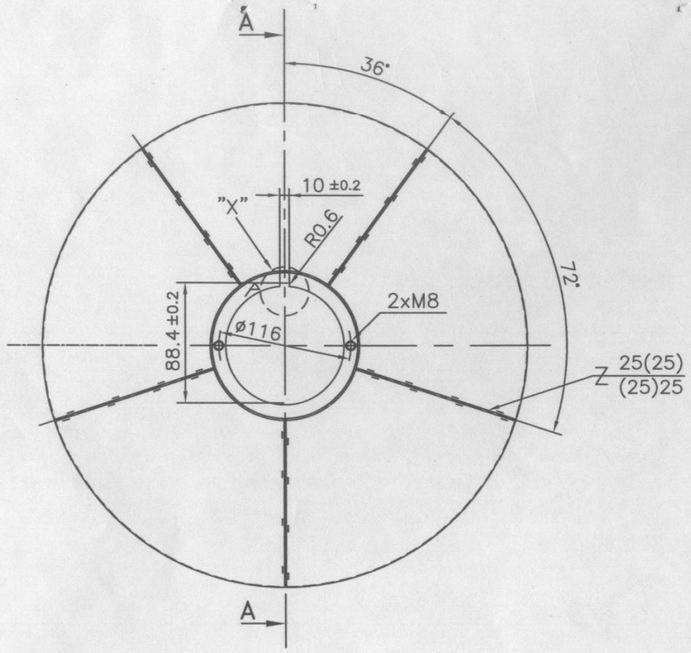

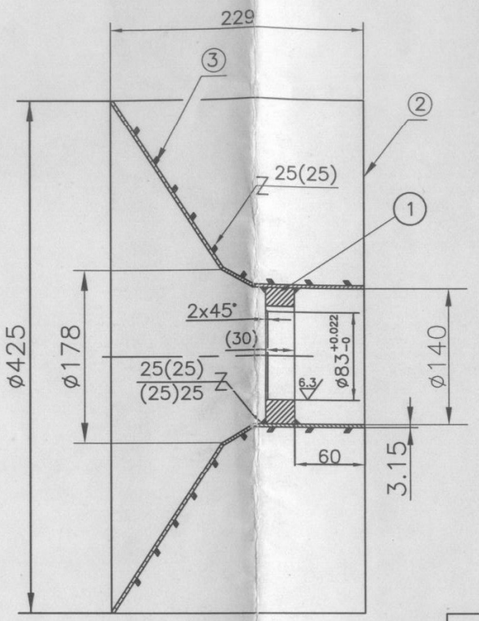

SECTION A–A

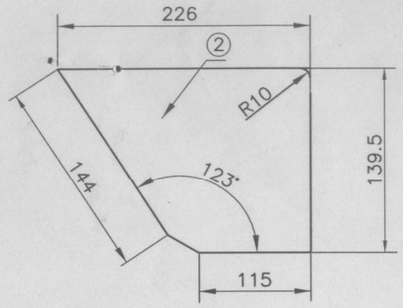

TOOL LIST		
ITEM	TOOL	DESCRIPTION
1	1505633	KEY SEATING CUTTER
1	–	DRILL PLATE FOR M10 HOLES
2		

GAUGE LIST					
LIMIT	NOM SIZE	SYM	TOOL NO.	ITEM	TYPE
10.200 / 9.800	10.0			001	SLIP GAUGE
115.022 / 115.000	ø115	H6	1508022	001	CALIPER GAUGE

THIS FAN DRG. CAN REPLACE FAN 34023240121

STYLE NO. :- BP9084461045

GES NO.–404583407

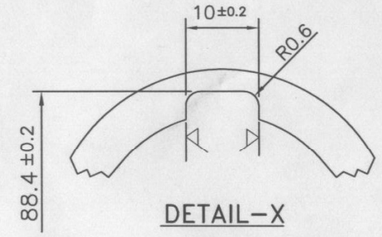

DETAIL–X

59–64	65–75	78–79	25–27	29–58	59	60–77	29–31	34–45	55	56–57	58–65	72
VAR 01	REMARKS	VAR. NO.	ITEM NO.	DESCRIPTION	STD.	DRAWING NO.	IT. NO. / 32–33 VAR.	MATL. CODE / 46–54 MATL. SPECN.	A/C	UNIT	UNIT WT. / 66–71 QTY.	GS
01			003	BACK PLATE		34023242051	01					
05			002	BLADE 3.15TK.x139.5x226				BP1011715996 / AA10115			0.85	
01			001	HUB 30TK.x78 I/Dx140 O/D				AA10108			1.0	

28 → CARD TYPE–3 | 28 → CARD TYPE–1 | 28 → CARD TYPE–2

TECHNICAL REQUIRMENTS :–

(1) ALL WELDS TO BE 3⊿UNLESS OTHERWISE STATED WELDS TO BE C.S. AA0622101 TO GR II

(2) WELD AT ENDS MUST, NO UNDER CUT/BURNING.

(3) SHARP EDGES TO BE ROUNDED OFF.

(4) CONCENTRICITY BETWEEN FAN O/D AND M/CD. I/D OF FAN SHOULD BE WITHIN 0.1 mm.

(5) FACE SHOULD NOT WOBBEL MORE THAN 0.5 mm.

ADDITIONAL INFORMATION
WO : 47222A401–51

STATUS OF DRAWING

DISTRIBUTION OF PRINTS
AME – 1 , TEX (IMM) –1
IMM – 3 , FBM(1B) –3
TEX(TOOLING) – 1

TYPE OF PRODUCT OR NAME OF CUSTOMER/PROJECT: 1LA4316–4 , H–COMPACT

BHARAT HEAVY ELECTRICALS LTD.
BHOPAL

	NAME	SIGN	DATE	NO.OF VAR.
DRN	PARVEEN	Parveen	06.09.08	
CKD	M.K.M	Mukesh	06.09.08	
APPD	P.B		06.09.08	

REV.	DATE	ALTERED / CHECKED / APPROVED	REV.	DATE	ALTERED / CHECKED / APPROVED

REV.	DATE	ALTERED / CHECKED / APPROVED
01	17.12.18	ALTERED YM -sd- / CHECKED / APPROVED AKM -sd-

STYLE NO. ADDED.

DEPT. AME | CODE 404 | UNTOL.DIMS.GR. | SCALE NTS | WEIGHT(K.G.) 10.0 | REF. TO ASSY. DRG. | ITEM NO. | NO.OF ITEMS

TITLE: EXTERNAL FAN

DRAWING NO. 34023240125 | REV. 01

SHEET NO. 01 | NO. OF SHEETS 01

REF. DRG. NO. | SIGN. & DATE | INVENTOYR NO.