DRG NO 2 402 42 45001

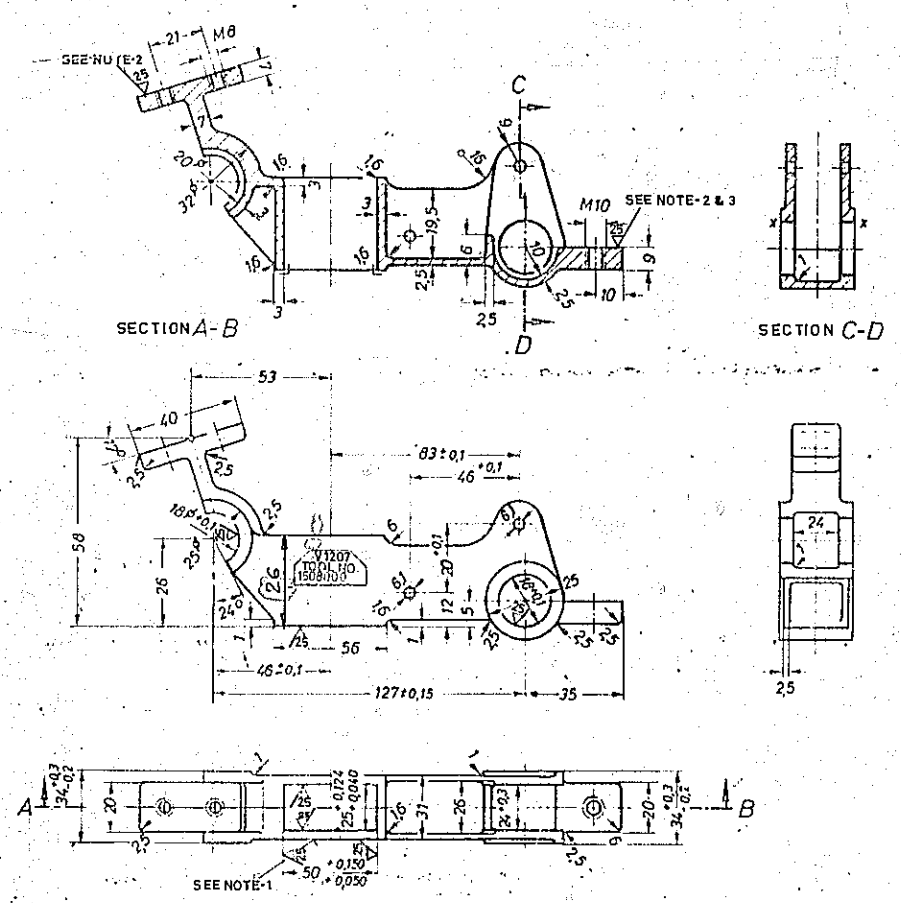

NOTE:-

1. TOOL - NO. 1508000 AND TYPE MARKING V1207 IS CAST INTERGRAL ON THIS SIDE WITH AVERAGE SCRIPT 4 TO DIN 1451 ON THE DEPRESSED WRITTING FIELD.
2. CONTACT SURFACES TO BE LEFT BARE.
3. TAP HOLE FOR M10 WITH 8·4Ø CAST INTEGRAL.
4. UNSPECIFIED RADIUS TO BE RO·6.
5. EDGES MARKED X TO BE ROUNDED OFF.
6. FINISH :- TO BE PAINTED LIGHT YELLOW WITH VARNISH NO. 31. OR NITRO CELLULOSE CLEAR LACQUER TO BP 27596
7. ALTERNATIVELY BRASS TO SPECIFICATION EN 1982-CuZn 38Al CAN BE USED.

-	PRESSURE DIE CASTING		001	UPPER PART ROUGH WEIGHT ·415				SEE NOT 7 BP 19996			0·410
VAP 01	REMARKS	VAR NO	ITEM NO	DESCRIPTION	STD	DRAWING NO	IT NO VAR	MATL CODE / MATL SPECN	A C	UNIT	UNIT WT / QTY
CARD TYPE 3				CARD TYPE 1				CARD TYPE 2			

ADDITIONAL INFORMATION

STATUS OF DRAWING

DISTRIBUTION OF PRINTS
AME-1 IMM-3
TCX (IMM)-1 FYM-4

TYPE OF PRODUCT
OR
NAME OF CUSTOMER/PROJECT

BHARAT HEAVY ELECTRICALS LIMITED
BHOPAL

	NAME	SIGN	DATE
DRN	m.k. Saxena		22-10-83
CHD	r.m.s. & v.k.j		7.11.83
APPD	V.R.G. Moorthy		21/11/83

REV	DATE	ALTD	REV	DATE	ALTD	REV	DATE	ALTD	REV	DATE	ALTD
6	28-9-07	CKD	05	30-4-07	CKD	04	08/01/99	CKD	3	28-8-87	CKD
DIMN 26 (D-7) WAS 28.			NOTE 7 ADDED			ST. NO. CHANGED IN 12 DIGITS.			YELLOW PIGMENT DELETED FROM NOTE 6.		

REV	DATE	ALTD	REV	DATE	ALTD
2	10-6-87	CKD.	01	8-8-85	CHECKED
ALTERNATE FINISH IN NOTE 6 & STYLE NO. ADDED.			PATT. NO. 12A0947 DELETED FROM NOTE 1. TOOL NO ADDED.		

DEPT A.M.E. CODE 404 | GRADE OF UN TOL DIM C.M.F | SCALE N.T.S. | WEIGHT (Kg) 0.410 | REF TO ASSY DRG 2 402 42 40009

TITLE UPPER PART FOR BRUSH HOLDER 1R57

CARD CODE

DRAWING NO 2 402 42 45001 REV 6

SHEET NO. NO OF SHEETS

THE INFORMATION ON THIS DOCUMENT IS THE PROPERTY OF BHARAT HEAVY ELECTRICALS LIMITED IT MUST NOT BE USED DIRECTLY OR INDIRECTLY IN ANY WAY DETRIMENTAL TO THE INTEREST OF THE COMPANY

M02 113G