FIRST ANGLE PROJECTION



(ALL DIMENSIOMS ARE IN mm)

| TOOL LIST | | |
|---|---|---|
| IT. | TOOL NO. | DESCRIPTION |
| 1 | 1593955 | DP FOR 4 HOLES (RADIAL) Ø13.5 AT DISTANCE OF 26 mm FROM DATUM A |
| | | |

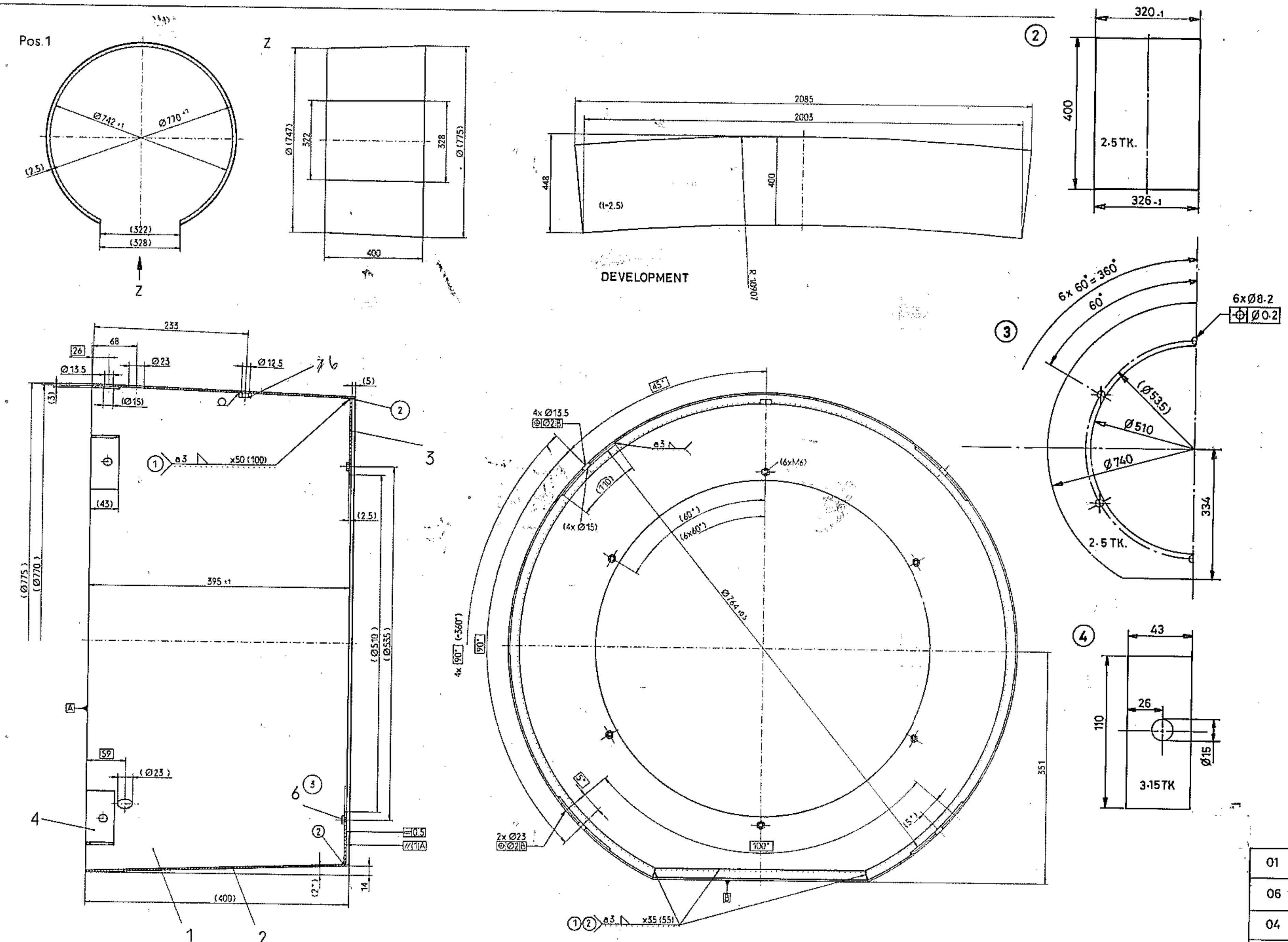


-0.3 -0.5

SN 11948 - PRIMER COATED

① Schweißraupen jeweils am Anfang und Ende der Naht

② mit Dichtmasse SN53126-F130 (Acrylat) nach dem Grundieren durchgehend abgedichtet. FTU 054.105 T.3

③ P.6 2x geheftet

TECHNICAL REQUIREMENTS (T.R.):-

1. WELD BEADS AT THE START AND END OF THE WELD. AS SHOWN ①
2. PACKED UP THOROUGHLY WITH PACKING MATERIAL SN 53126-F-130 (ACRYCATE) AFTER THE PRIMER COATING FTU 054.105 P3. AS SHOWN ②
3. P 62 x TACK WELDED. AS SHOWN ③

| VAR 01 | REMARKS | VAR NO. | ITEM NO. | DESCRIPTION | STD | DRAWING NO. | IT.NO. / VAR. | MATL. CODE / MATL. SPCN. | CIA | UNIT | UNIT WT. / QTY. | GS | ZONE |
|---|---|---|---|---|---|---|---|---|---|---|---|---|---|
| 01 | | | 06 | NUT A M10-A | | | | AA71511.15032 / AA7151115 | | | | | |
| 06 | | | 05 | NUT A M6- A | | | | AA71511.15016 / AA7151115 | | | | | |
| 04 | | | 04 | PLATE 3.15x43x110 | | | | AA1011713136 / AA101 13 | | | 0.12 | | |
| 01 | | | 03 | BACK PLATE 2.5x740x740 | | | | AA1011715120 / AA10115 | | | 10.75 | | |
| 01 | | | 02 | BOTTOM PLATE 2.5x326x400 | | | | AA1011715120 / AA10115 | | | 2.55 | | |
| 01 | | | 01 | FAN CASING 2.5x448x2085 | | | | AA1011715120 / AA10115 | | | 18.33 | | |

28 — CARD TYPE-3 | 28 — CARD TYPE-1 | 28 — CARD TYPE-2

ADDITIONAL INFORMATION
W.O. –
STATUS OF DRAWING

DISTRIBUTION OF PRINTS
AME – 1  IMM – 3
PLM – 3  GTG (IMM) – 1
FBM – 3

TYPE OF PRODUCT OR NAME OF CUSTOMER/PROJECT: 1LA4 354 –4  1MV1

BHARAT HEAVY ELECTRICALS LTD. BHOPAL

| | NAME | SIGN | DATE |
|---|---|---|---|
| DRN. | SPVERMA | [signature] | 31/8/05 |
| CKD. | P.S.TAYDE | [signature] | 1/9/05 |
| APPD. | P.B. | [signature] | 1.9.05 |

NO. OF VAR.

| DEPT. | INTOL. DIMS. GR. | SCALE | WEIGHT (KG) | REF. TO ASSY. DRG. | ITEM NO. | NO. OF ITEM |
|---|---|---|---|---|---|---|
| AME, CODE 404 | | NTS | 33 | | | |

"Ah" AZ00LE H-COMPACT

# FAN CASING DETAILS

1LA4

DRAWING NO. 1 402 3440048 REV. 02

SHT. NO. 1  NO. OF SHT. 1

| REV. | DATE | ALTERED / CHECKED / APPROVED | ZONE |
|---|---|---|---|
| 02 | 23/10/09 | [signatures] | |
| 01 | 04/10/05 | ALTERED (SPV) / CHECKED / APPROVED [signatures] — TOOL LIST & TOOL NO. ADDED. | |

H006819

THE INFORMATION ON THIS DOCUMENT IS THE PROPERTY OF BHARAT HEAVY ELECTRICALS LIMITED.
IT MUST NOT BE USED DIRECTLY OR INDIRECTLY IN ANY WAY DETRIMENTAL TO THE INTEREST OF THE COMPANY.